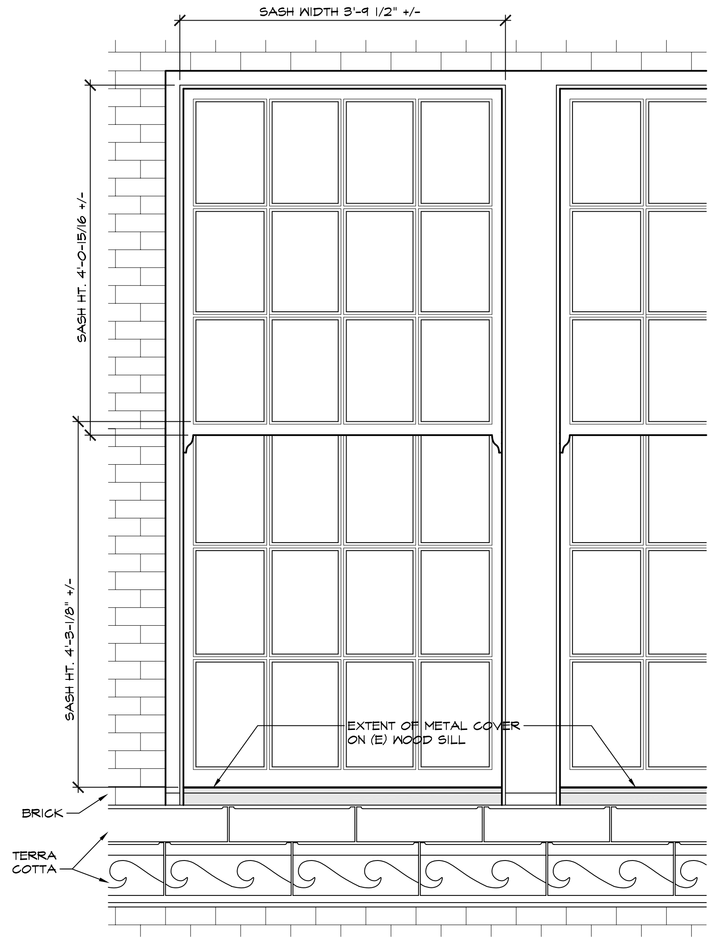

5 A3.1E Typical Window Elevation - Exterior View

Scale: 1" = 1'-0"

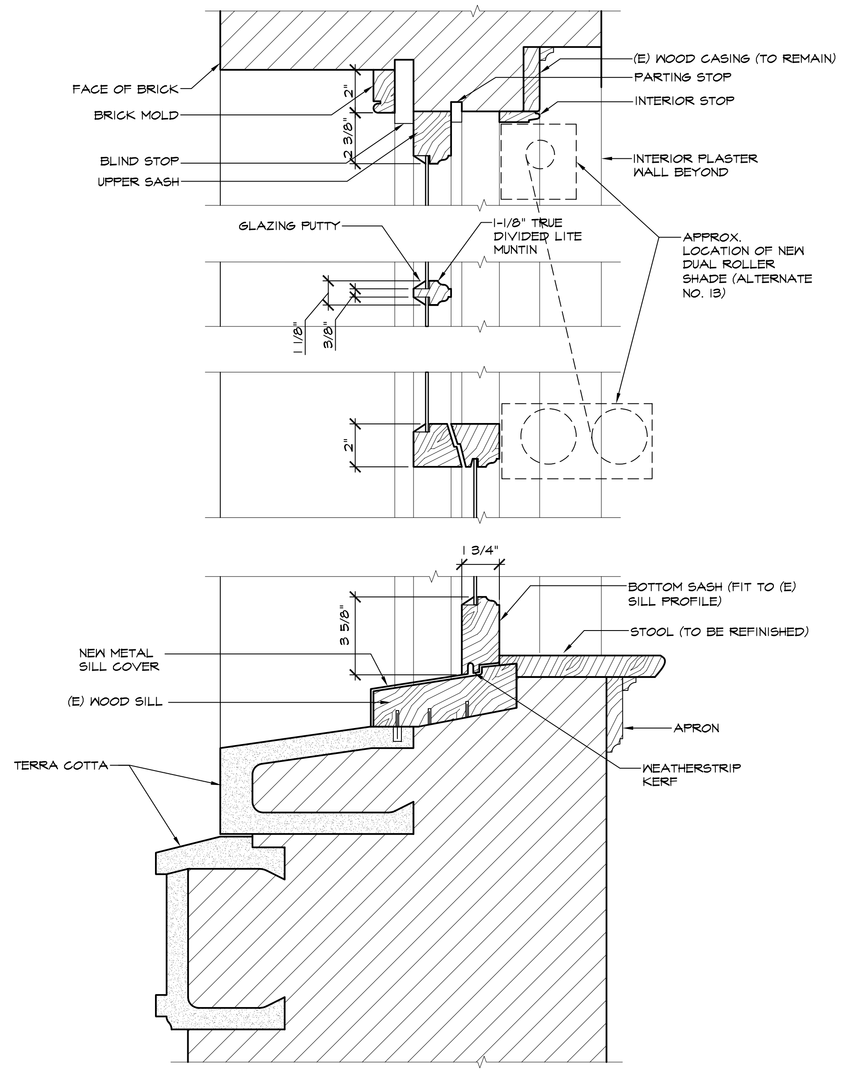

3 A3.1E Typical Window - Vertical Section

Scale: 3" = 1'-0"

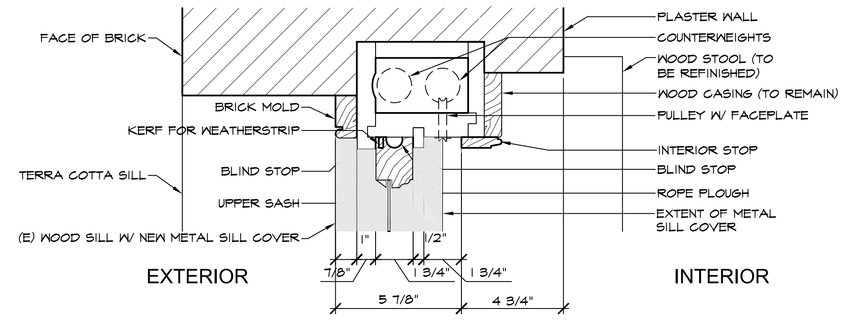

1 A3.1E Typ. Window - Horizontal Sect. @ Jamb

Scale: 3" = 1'-0"

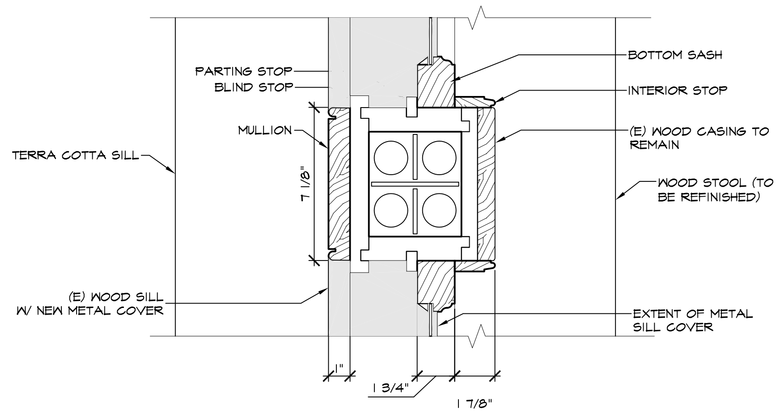

2 A3.1E Typ. Window - Horizontal Sect. @ Mullion

Scale: 3" = 1'-0"

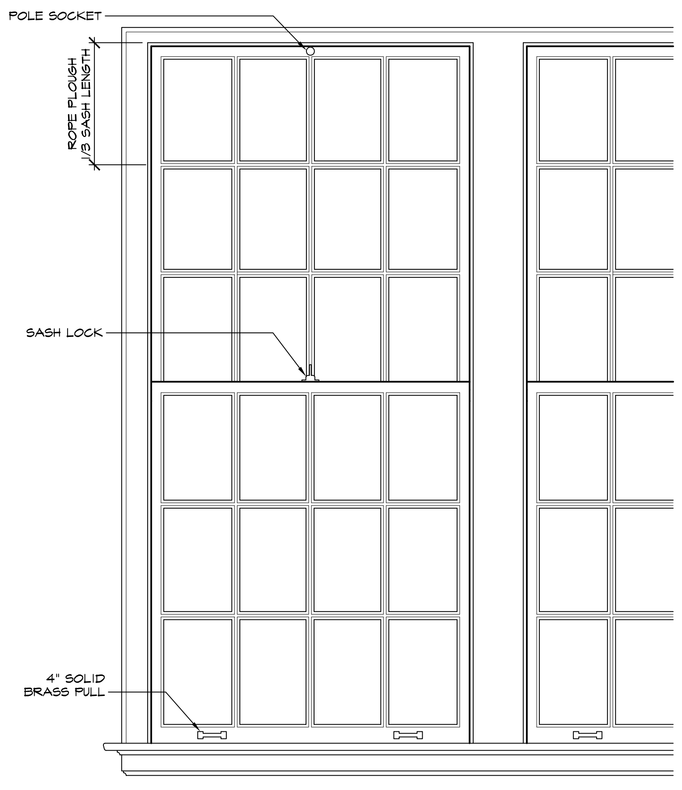

6 A3.1E Typical Window Elevation - Interior View

Scale: 1" = 1'-0"

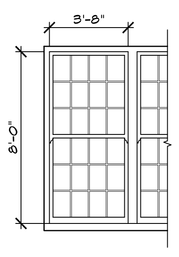

A (QTY: 62)
12/12 DH

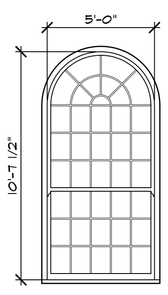

D (QTY: 10)
21/15 DH ROUND-TOP

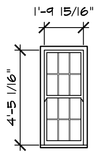

G (QTY: 4)
6/6 DH

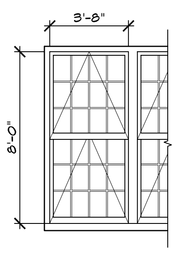

I (QTY: 4)
12/12 AWNING

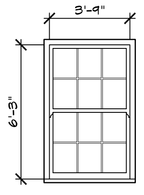

B (QTY: 12)
6/6 DH
W/ C. I. GRILL

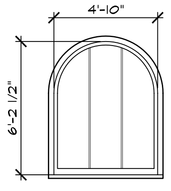

E (QTY: 6)
3 LIGHT FIXED TRANSOM

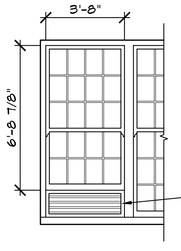

H (QTY: 14)
12/8 DH
W/ UNIVENT

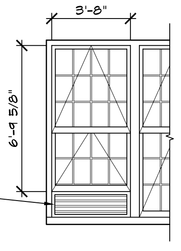

J (QTY: 1)
12/8 AWNING
W/ UNIVENT

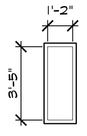

C (QTY: 14)
SINGLE LIGHT
CASEMENT
W/ C. I. GRILL

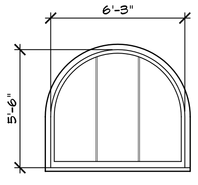

F (QTY: 2)
3 LIGHT FIXED TRANSOM
W/ C. I. GRILL

4 A3.1E Window Types

Scale: 1/4" = 1'-0"

(REFER TO WINDOW REHABILITATION SCHEDULE FOR APPROXIMATE SIZES AND OPERATION)